SANY – SRC 840 – 40 TN

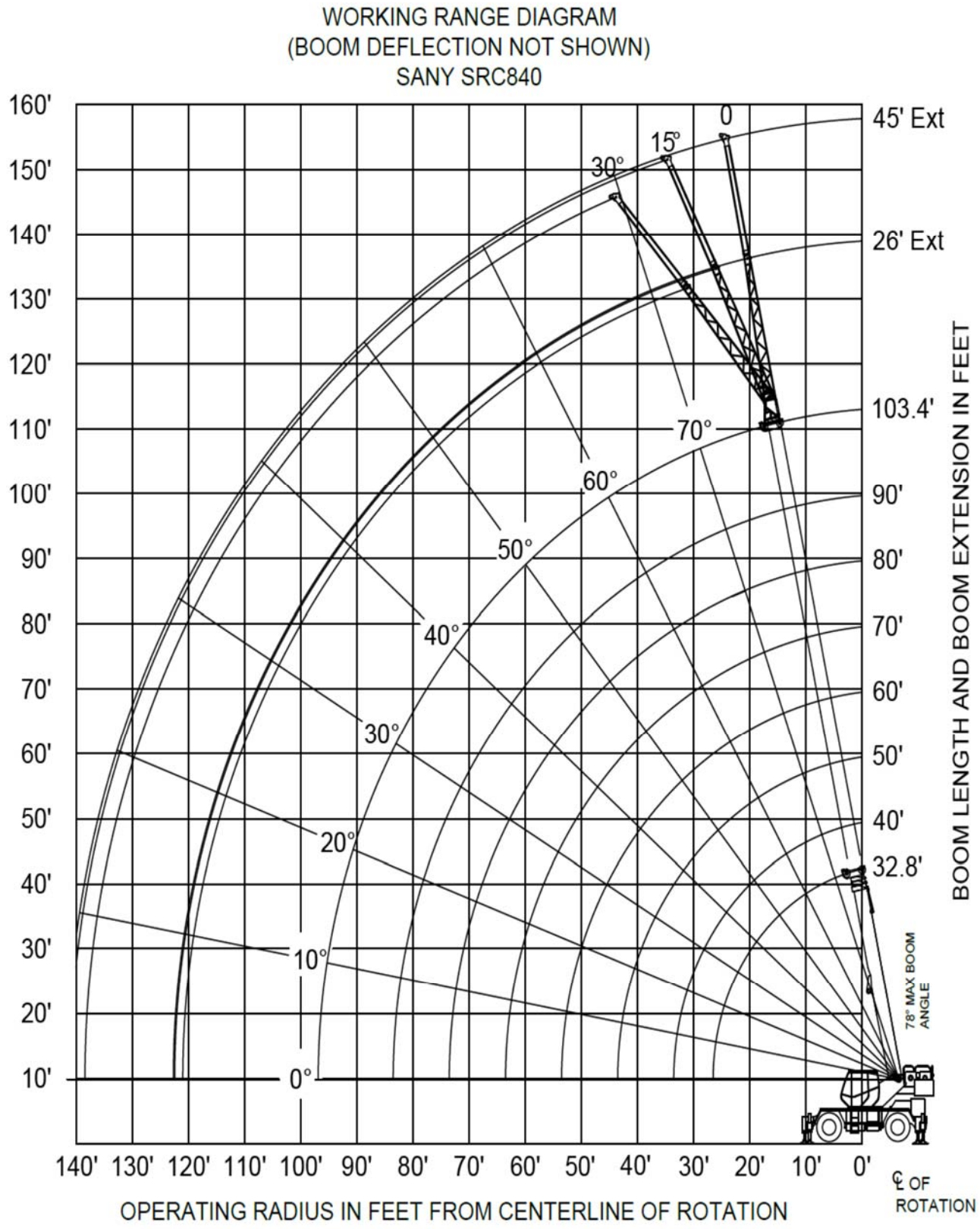

SANY – SRC 840 – 40 TN

SRC840 MAIN BOOM - ON OUTRIGGERS - FULLY EXTENDED, 360°

Main Boom | Outriggers Fully Extended | 360°

RADIUS FT	Boom Length - Feet							
	32.8	40	50	60	70	80	90	103.4
10	80000 (65)	50690 (70)	48720 (74.5)					
12	69680 (61)	50690 (67)	48720 (72.5)	46400 (75.5)				
15	55990 (54.5)	48390 (62)	44090 (68.5)	41880 (72.5)	40630 (75.5)			
20	40120 (41.5)	36740 (53)	35270 (62)	34830 (67.5)	32540 (71)	31180 (74)	22920 (76)	
25	30040 (21.5)	28130 (42.5)	26790 (55)	28760 (62)	27080 (66.5)	25820 (70.5)	20720 (73)	18950 (76)
30		22310 (28.5)	20130 (47)	22940 (56)	22880 (62)	21830 (66.5)	18180 (69.5)	17410 (73)
35			15670 (38)	18790 (50)	18950 (57)	18680 (62.5)	15650 (66)	15540 (70)
40			12480 (25.5)	15170 (43)	15380 (52)	15530 (58.5)	13880 (62.5)	13660 (67)
45				12230 (34.5)	12380 (46)	12490 (54.5)	12320 (58.5)	12160 (64)
50				9870 (23)	10160 (39.5)	10250 (49.5)	10270 (54.5)	10270 (60.5)
55					8320 (32)	8480 (44)	8500 (50.5)	8530 (57)
60					6820 (23)	7050 (38)	7090 (45.5)	7140 (53.5)
65						5820 (30.5)	5950 (41)	5990 (50)
70						4800 (21)	4980 (35)	5020 (46)
75							4100 (28.5)	4230 (41.5)
80							3370 (19.5)	3520 (36.5)
85								2860 (31.5)
90								2310 (24.5)
95								1800 (14.5)
MIN BOOM ANGLE	0°	0°	0°	0°	0°	0°	0°	0°
PARTS LINE	8	6	6	4	4	4	4	3

Boom Angle	Main Boom Length - Feet							
	32.8	40	50	60	70	80	90	103.4
0°	25350 (26.5)	18730 (33.7)	12670 (43.7)	8520 (53.7)	5930 (63.7)	4180 (73.7)	2900 (83.7)	1660 (96.8)

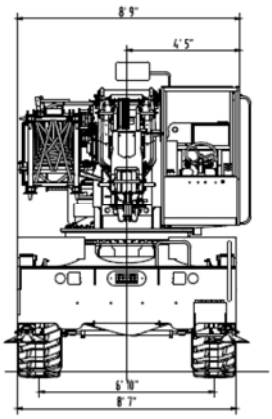

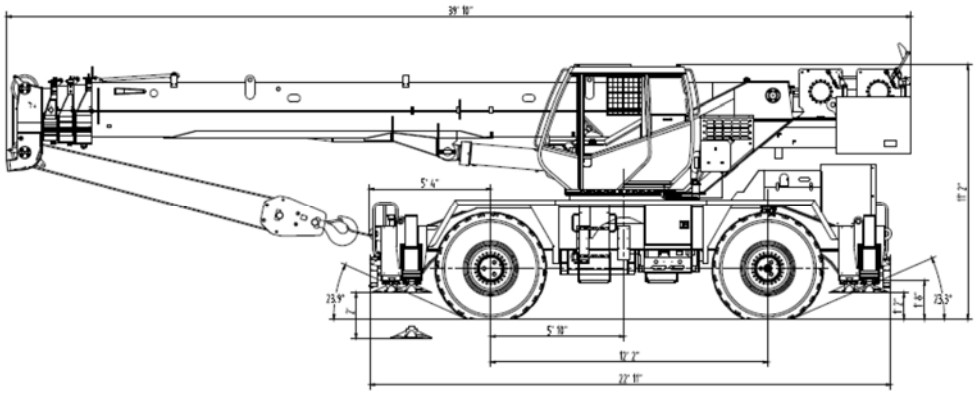

Overall mass	71,209 lb	32,300 kg
Front axle load	36,685 lb	16,640 kg
Rear axle load	34,524 lb	15,660 kg